Smoothed Dissipative Particle Dynamics Model for Predicting Self-Assembled Nano-Cellulose Fibre Structures

David Vidal and Tetsu Uesaka
FPInnovations, Pointe-Claire, Québec, CANADA

Nano-cellulose fibres in suspension/gel states are known to have complex structures, depending on, e.g., concentration and ionic strength. These complex structures pose both opportunity (creating novel functional structures) and challenges (difficult rheology and processability). To better assess their impacts on the formation of nano-cellulose structures, a novel particle-based method has been proposed based on Smoothed Dissipative Particle Dynamics. This numerical approach treats both fluid and solid phases, in a unified way, as a set of particles exchanging momentum and/or interacting through Derjaguin-Landau-Verwey-Overbeek (DLVO) potentials. Additionally, nano-cellulose

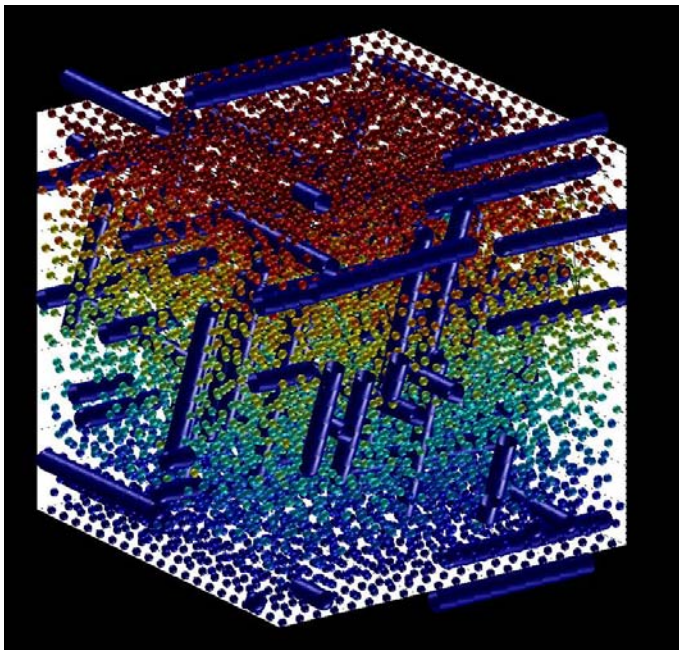

Figure 1 - Small-scale example of SDPD simulation of fibres starting to be sheared under a Couette flow. Here fibres are represented by blue round cylinders. The small spheres locate the centers of mass of so-called fluid particles interacting with the fibres. The color of spheres indicates the magnitude of their respective velocity, the warmer the color, the higher the velocity.

fibres are represented as strings of solid particles connected through extensional/bending springs. Brownian motion is also accounted for as a dissipative term. Preliminary results already showed that self-assembled structures created by the nano-cellulose fibres are extremely sensitive to the type of interactions (e.g., electrostatic force interactions), the intensity and spatial distance of the interactions, and the concentration and configuration of nano-cellulose fibres. By using this method, it is thus possible to investigate the

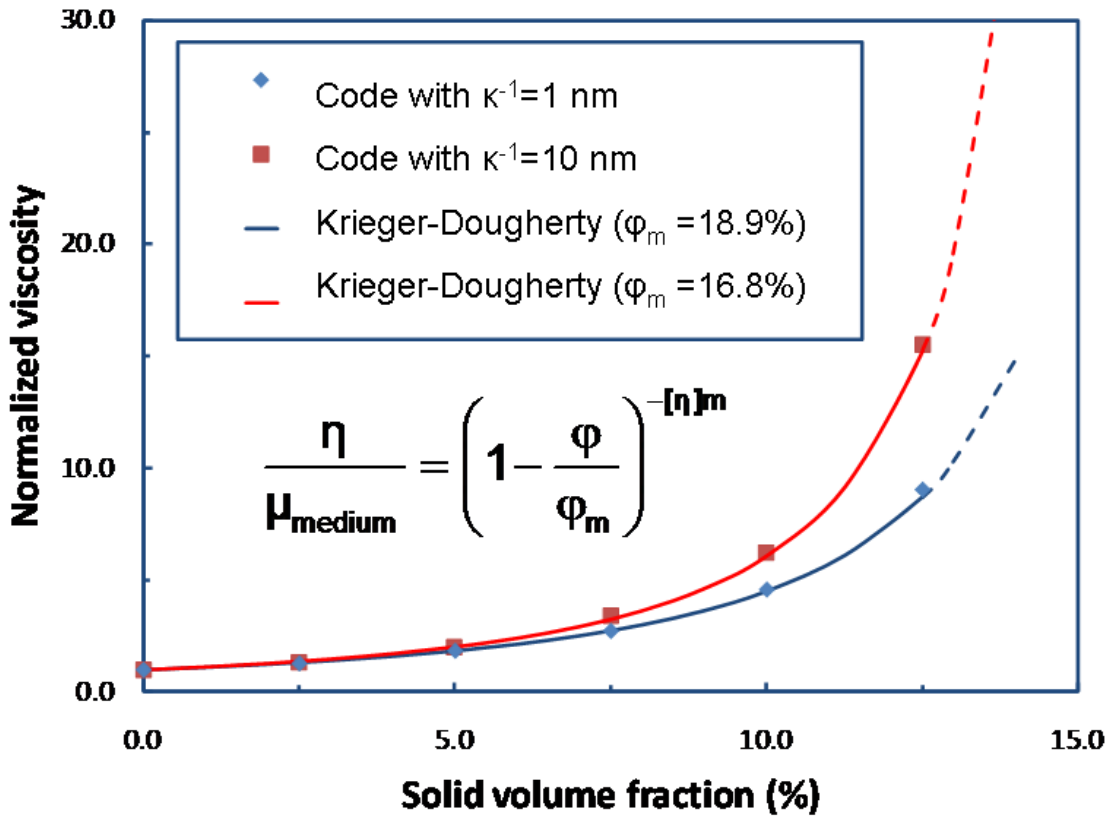

Figure 2 - Simulation predictions of the viscosity increase as a function of fibre content for two different double layer thicknesses (κ^{-1}). The data can be well fitted by Krieger-Dougherty correlation, showing that the method is able to reproduce expected trends.

impacts of hydrodynamics (e.g., shear), temperature, and ionic strength of the suspension on the formation of structures.

Acknowledgments

The financial contribution of Tekes, the Finnish Funding Agency for Technology and Innovation, through the Forestcluster Ltd is gratefully acknowledged. The authors would also like to express their gratitude to Dr. Hellen Erkki and Dr. Jukka Ketoja, both from VTT, for their continuous support.

TAPPI VTT
INTERNATIONAL CONFERENCE ON NANOTECHNOLOGY FOR THE FOREST PRODUCTS INDUSTRY
September 27-29, 2010 • Otaniemi, Espoo, Finland
Technical Advances and Applications in Nanotech Products

Smoothed Dissipative Particle Dynamics Model for Predicting Self-assembled Nano-Cellulose Fibre Structures

David Vidal & Tetsu Uesaka

FPInnovations

Re-engineering Paper project (EffTech)

Forestcluster TEKES

Objectives

- Nano-cellulose suspensions/gels have complex structures, depending on, e.g., concentration and ionic strength

- These complex structures pose both:
  - opportunities - creating novel functional structures
  - challenges - difficult rheology and processability

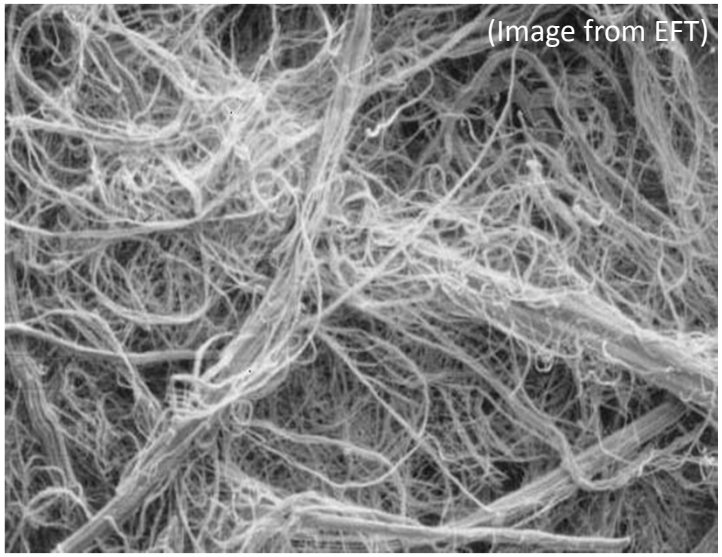

Predict and understand the formation of structures of nano-fibrillated cellulose (NFC) under flow conditions → rheology

Methodology

- Develop a 3D unified solid-liquid numerical model based on Smoothed Particle Hydrodynamics (SPH) to simulate fibril dynamics

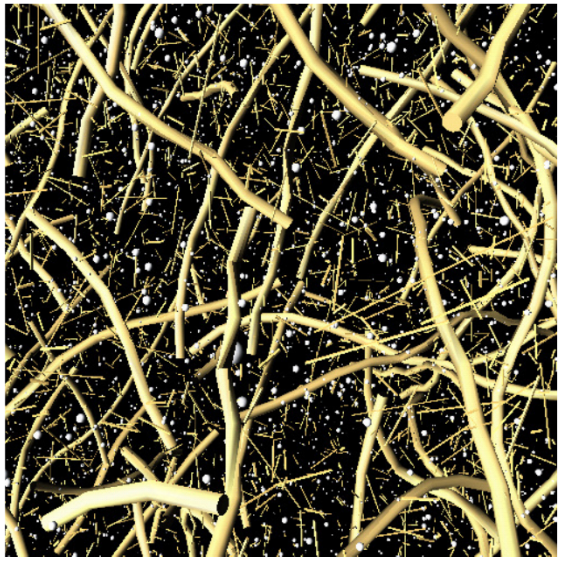

(Image from S. Lindström)

Available Particle Methods

Atomistic approach:

- Molecular Dynamics (MD) – Adler & Wainright, 1957

Mesoscopic approaches:

- Brownian Dynamics (BD) – Ermak, 1975
- Dissipative Particle Dynamics (DPD) – Hoogerbrugge & Koelman, 1992

Macroscopic approaches:

- Monte-Carlo (MC) – Metropolis & Ulam, 1949
- Particle-in-Cell Method (PIC) – Harlow, 1963
- Discrete Element Method (DEM) – Cundall & Strack, 1971
- Smoothed Particle Hydrodynamics (SPH) - Lucy, 1977
- Stokesian Dynamics (SD) – Brady & Bossis, 1988
- Lattice Gas/Lattice Boltzmann Method (LBM) - McNamara & Zanetti, 1988
- Stochastic Rotation Dynamics (SRD) – Malevanets & Kapral, 1999
- Smoothed Dissipative Particle Dynamics (SDPD) – Espanol & Revenga, 2003
- Lindström & Uesaka Model - Lindström & Uesaka, 2007

Proposed Model

- Unified interaction approach → no "coupling" required between solid and liquid phases
- Elongated solid particles can be dealt with a collection of spheres hooked together
- Additional forces can be added:
  - Colloidal (electrostatic, Van der Walls, Born repulsion) & Brownian
  - Stretching & bending → fiber flexibility
- High parallel content required for computation

An improved SPH method seems the best approach: Smoothed Dissipative Particles Dynamics

Unified Interaction Approach

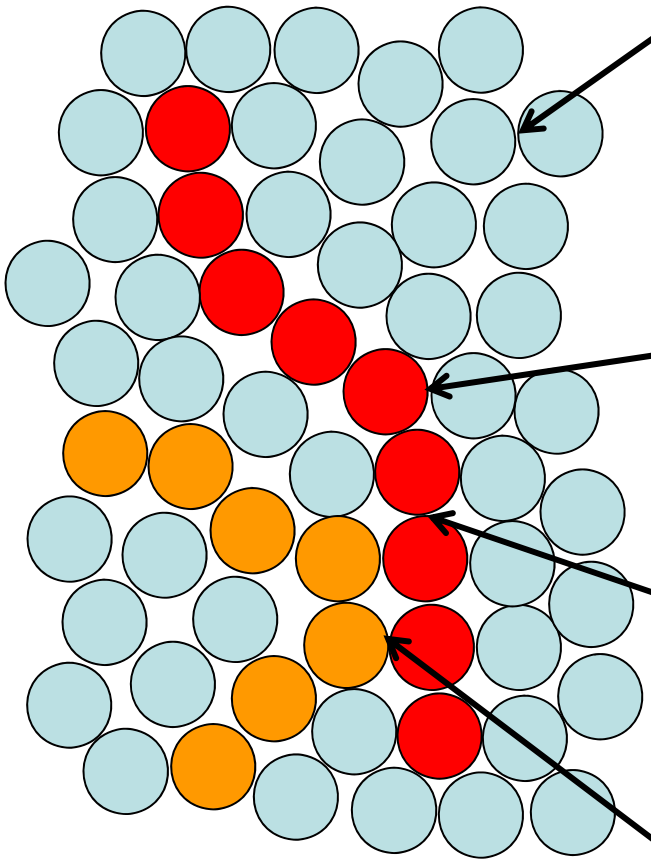

SPH fluid particles

Exchange momentum through:
- pressure
- shear stress
- thermal fluctuations (SDPD)

Interacting fluid-solid particles

Interact through:
- truncated Lennard-Jones potential

Intra-fibril particles

Interact through:
- stretching & bending (spring) forces

Interacting fibril particles

Interact through:
- Born + DLVO potentials
- lubrication force

Smoothed Particle Hydrodynamics (SPH)

- Particles represent volumes of fluid which have a spatial distance (h) over which their properties (e.g. ρ) are "smoothed" by a *kernel function (W)*
- From a given initial & boundary conditions, particle properties are evolved in time
- This is a CFD approach, but can be seen as a particle method

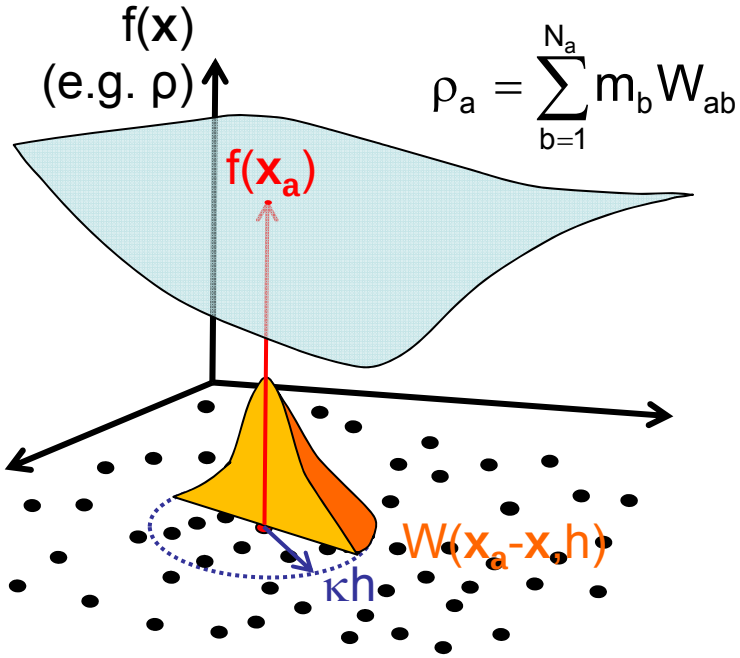

$$f(\mathbf{x_a}) = \int_\Omega f(\mathbf{x})\,\delta(\mathbf{x_a}-\mathbf{x})d\mathbf{x}$$

$$\lim_{h\to 0} W(\mathbf{x_a}-\mathbf{x},h)d\mathbf{x} = \delta(\mathbf{x_a}-\mathbf{x})$$

$$f(\mathbf{x_a}) \approx \int_\Omega f(\mathbf{x})\,W(\mathbf{x_a}-\mathbf{x},h)d\mathbf{x}$$

$$\approx \sum_{b=1}^{N_a} \frac{m_b}{\rho_b} f(\mathbf{x}_b) W(\mathbf{x_a}-\mathbf{x}_b,h)$$

Fiber Flexibility

$$\mathbf{F}_k^{stretch} = k_s \sum_l \left(r_{kl} - l_0\right) \mathbf{e}_{kl}$$

$$k_s = \frac{\pi d_s}{4} E$$

$$\mathbf{F}_k^{bend} = -\frac{k_b}{2} \frac{\partial}{\partial \mathbf{r}_k} \sum_l \left(\mathbf{e}_{l+1,l} - \mathbf{e}_{l,l-1}\right)^2$$

$$k_b = \frac{A}{l_0}$$

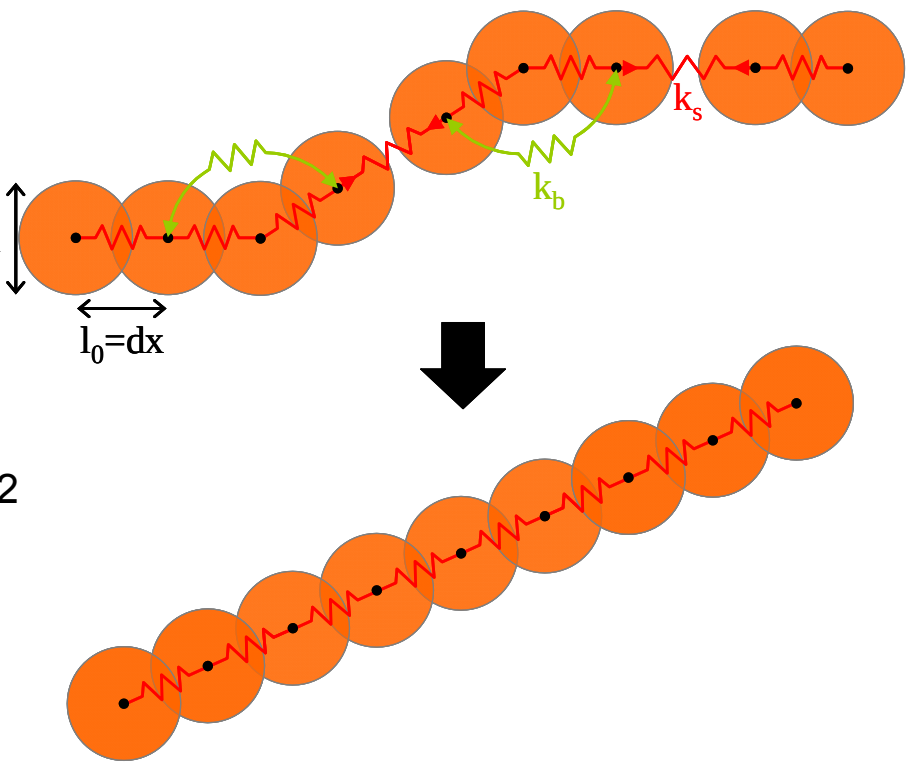

What are E & *A* for NFC?

An “Educated Guess” from MD

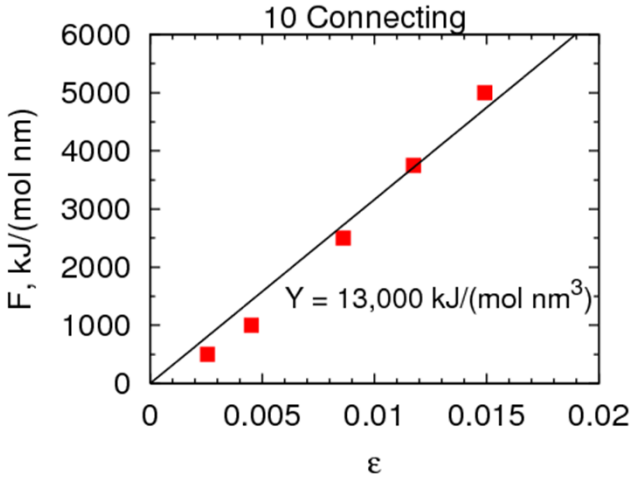

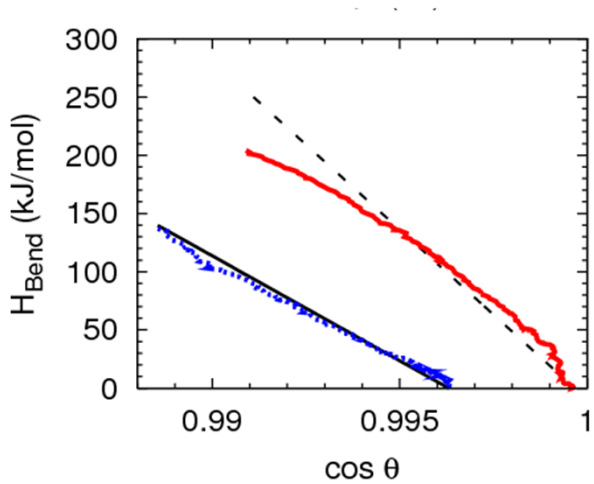

Stretching simulations

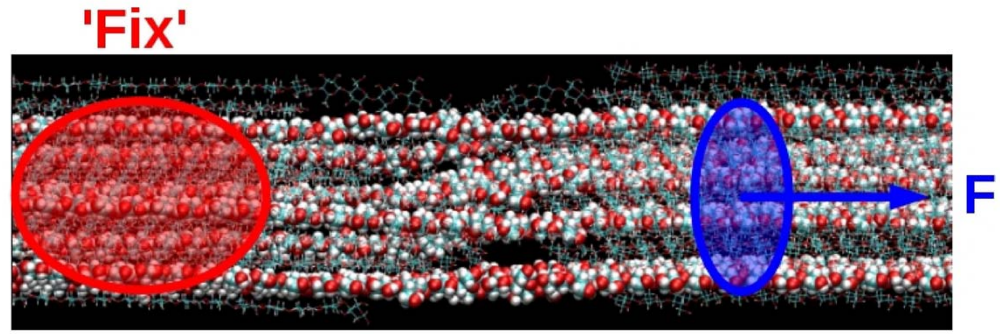

Bending simulations

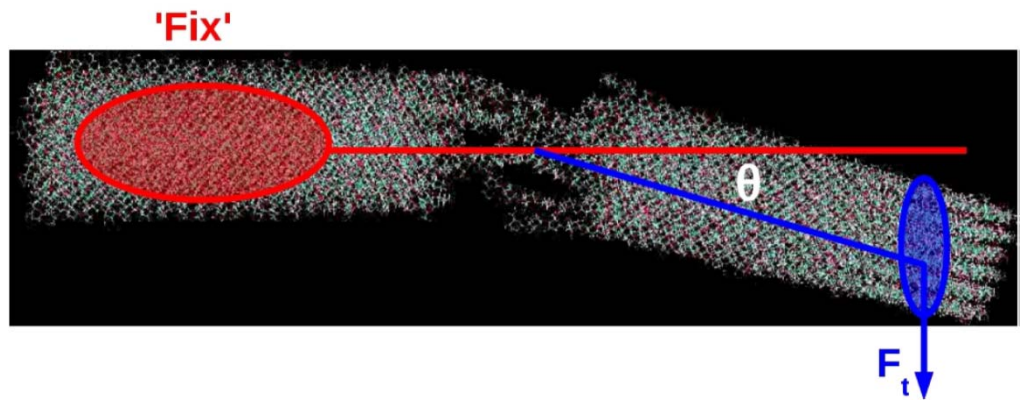

(J. Liam McWhirter, Sami Paavilainen et al.)

Solid-solid Potential Interactions

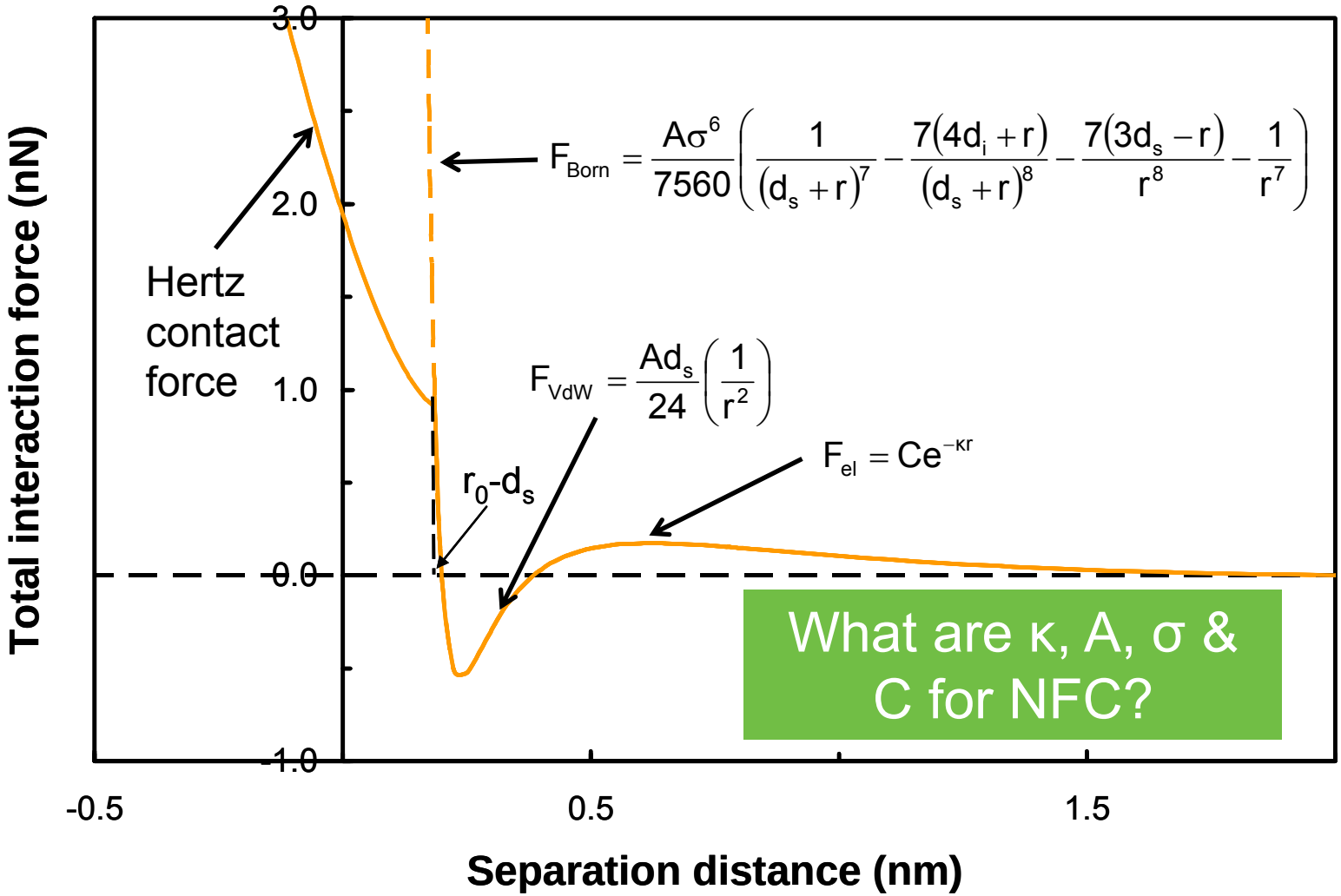

An “Educated Guess” from MD

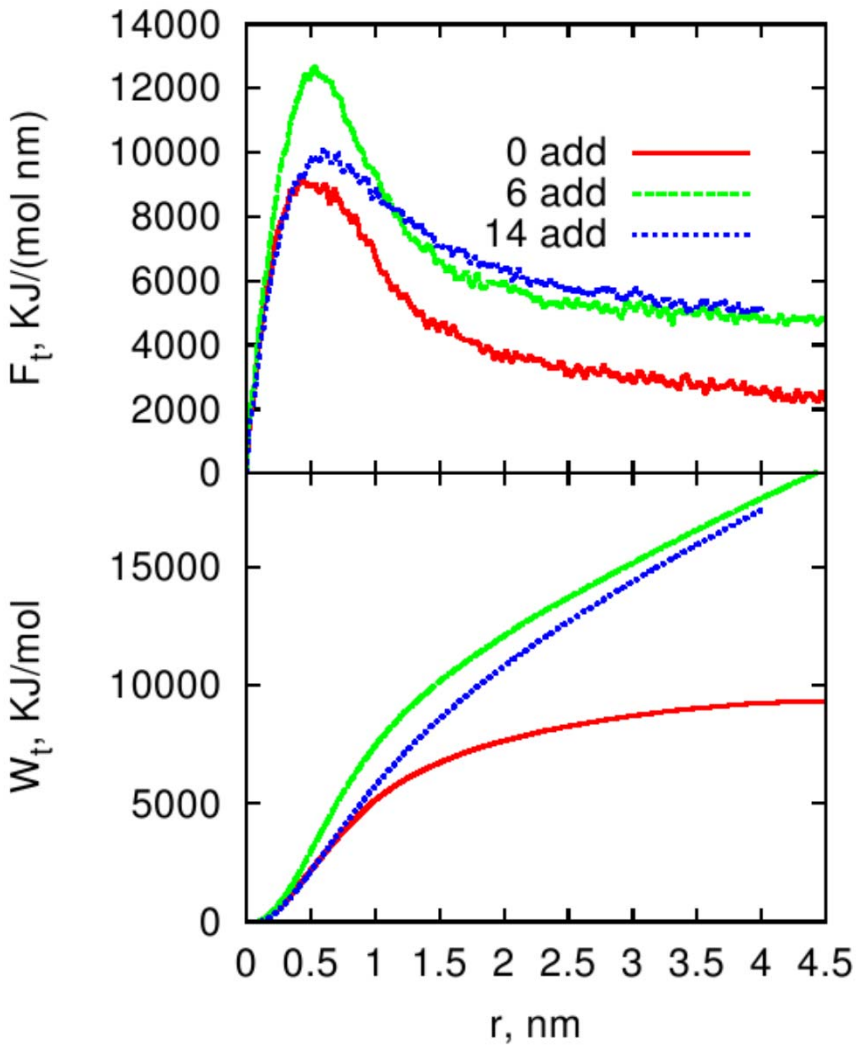

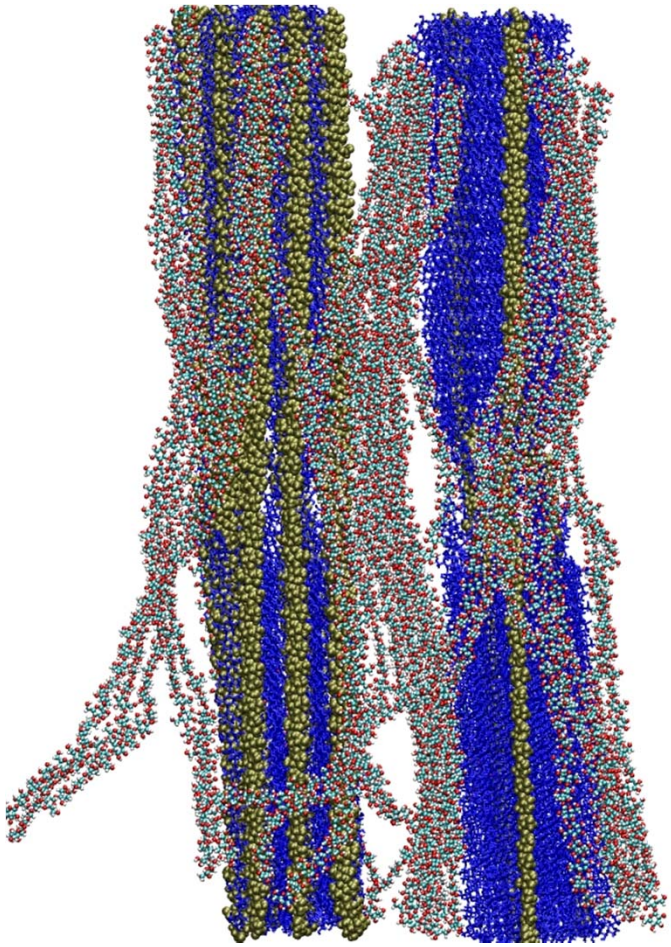

(J. Liam McWhirter, Sami Paavilainen et al.)

Time Integration Convergence Criteria

CFL condition:

$$dt \leq 0.25 \frac{h}{c_s} \quad \text{with } c_s \approx 10\, V_{max}$$

Viscous diffusion condition:

$$dt \leq 0.125 \frac{\rho h^2}{\mu}$$

Acceleration condition:

$$dt \leq 0.25 \min_i \left(\frac{h}{\|\mathbf{a}_i\|} \right)^{1/2}$$

depend on potential interactions

dt ~ 1-10 ps

Example of Code Instability

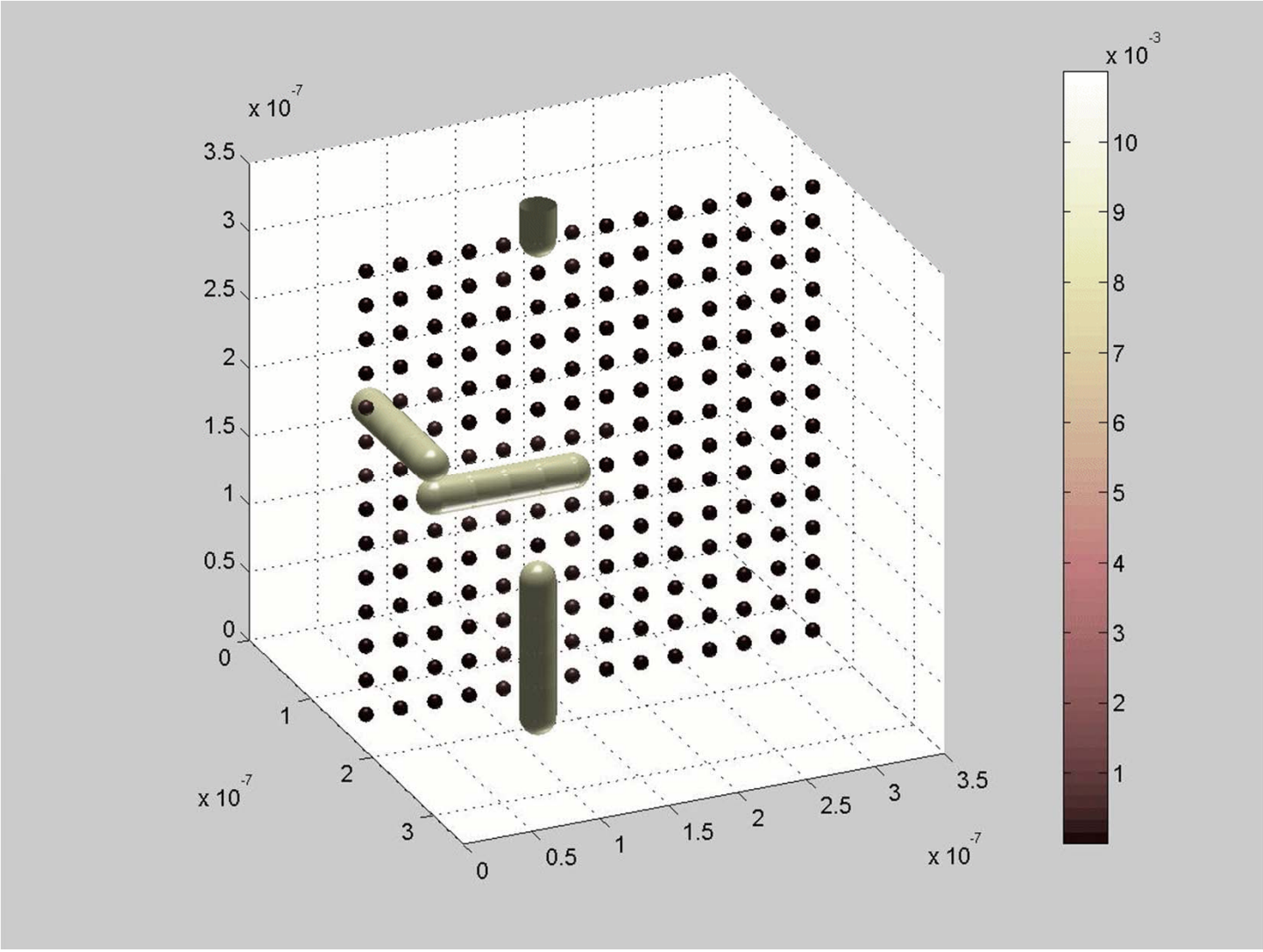

Fibrils under Couette Flow

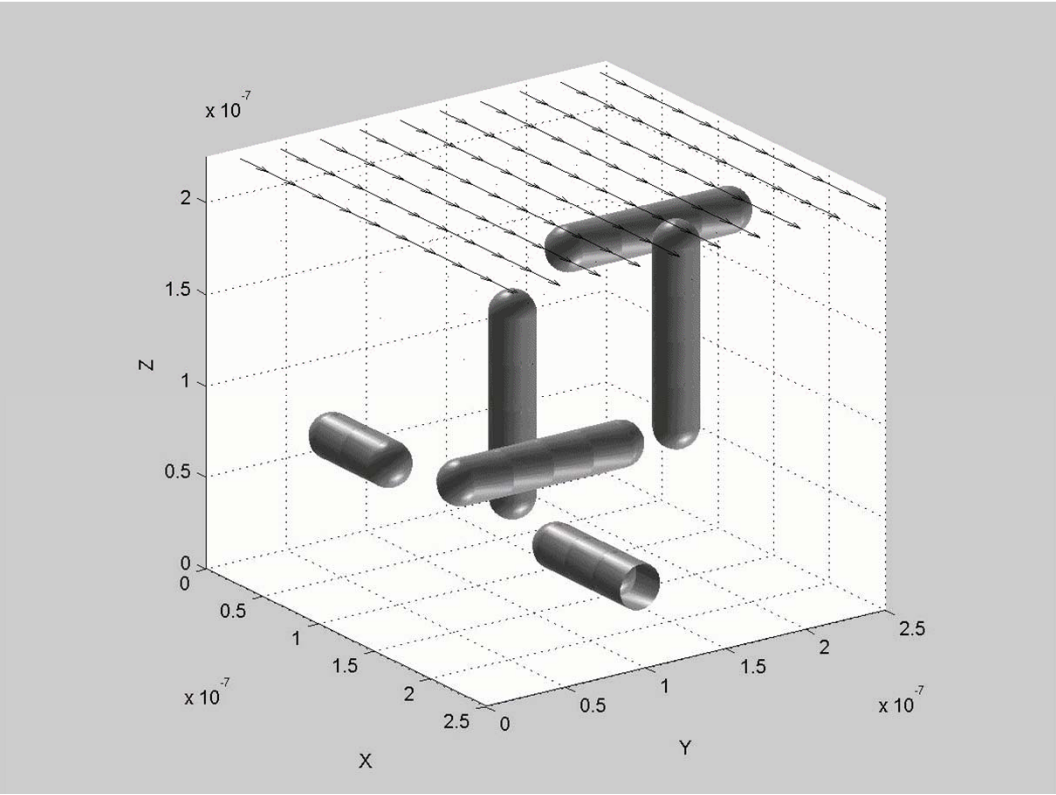

Side view

<u>Short nano-fibrils submitted to Couette Flow</u>

Fibrils under Couette Flow

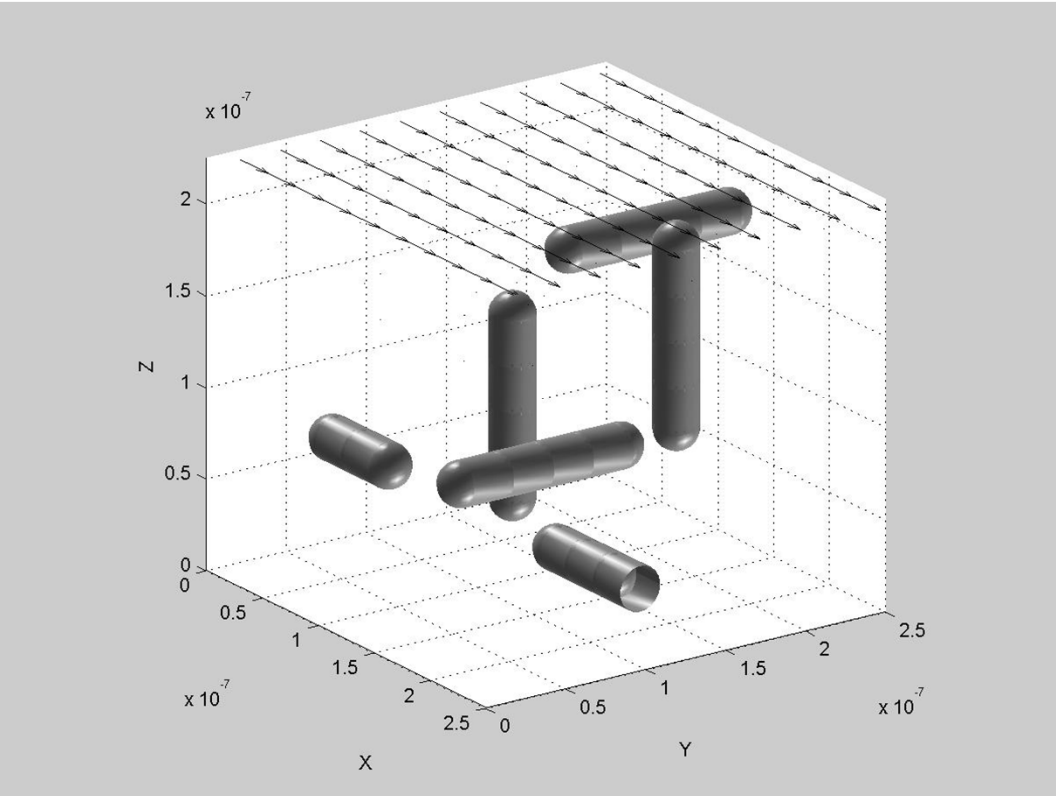

Perspective view

<u>Short nano-fibrils submitted to Couette Flow</u>

Larger Simulations…

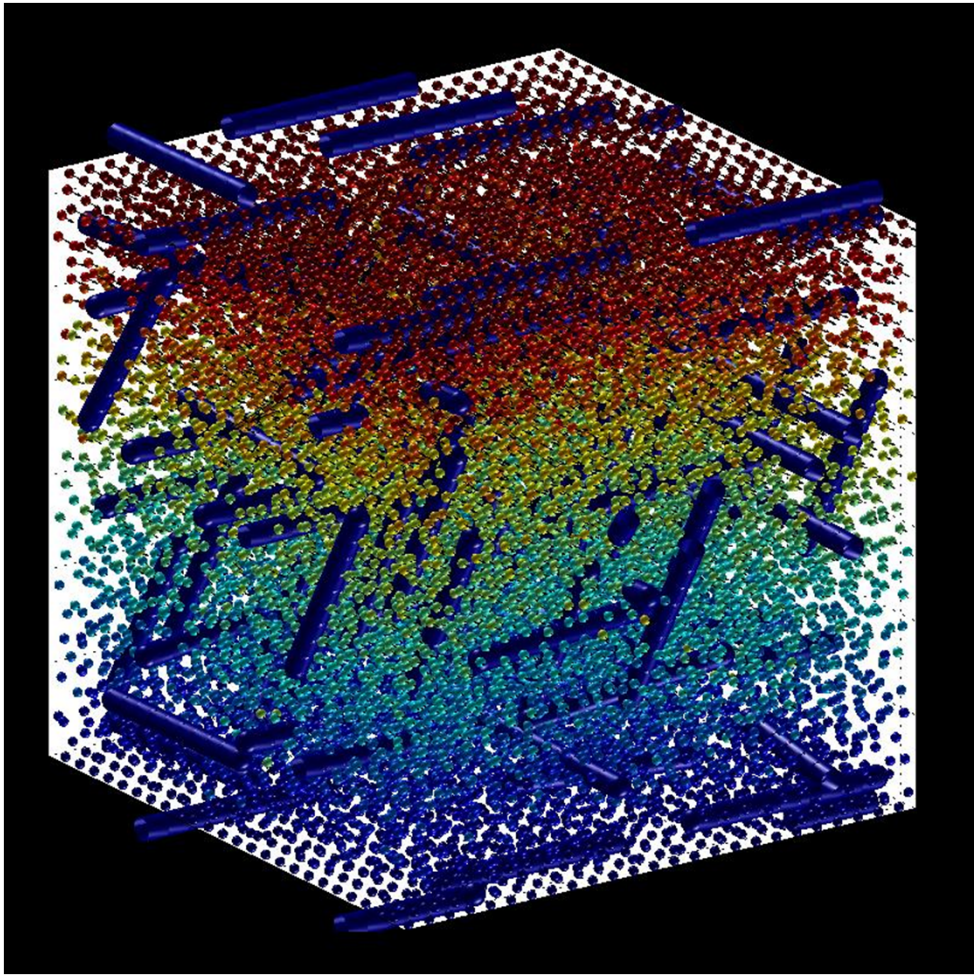

Short nano-fibrils submitted to Couette Flow

Impact of Solid Content & Ionic Strength

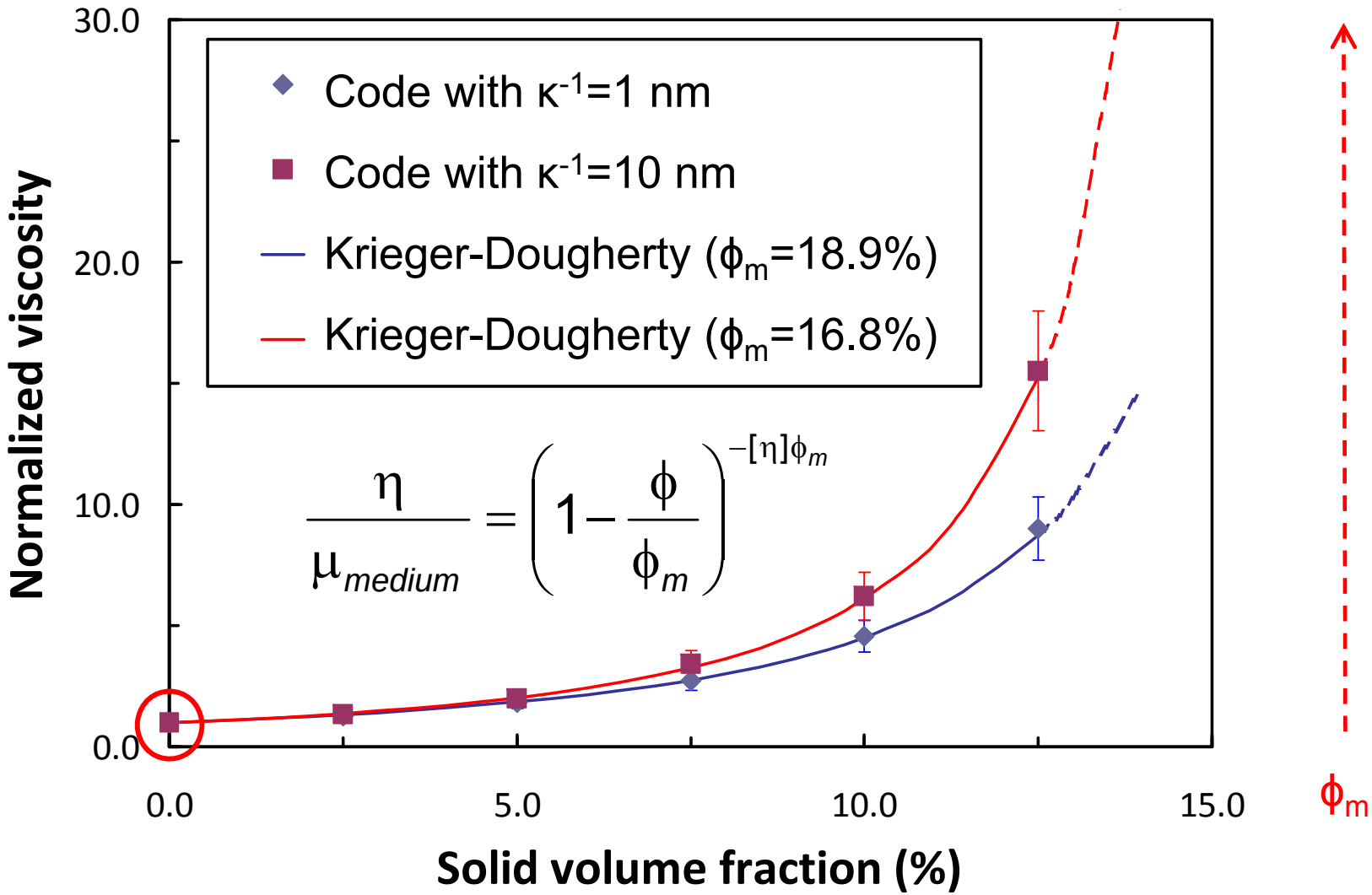

Thixotropic Effects

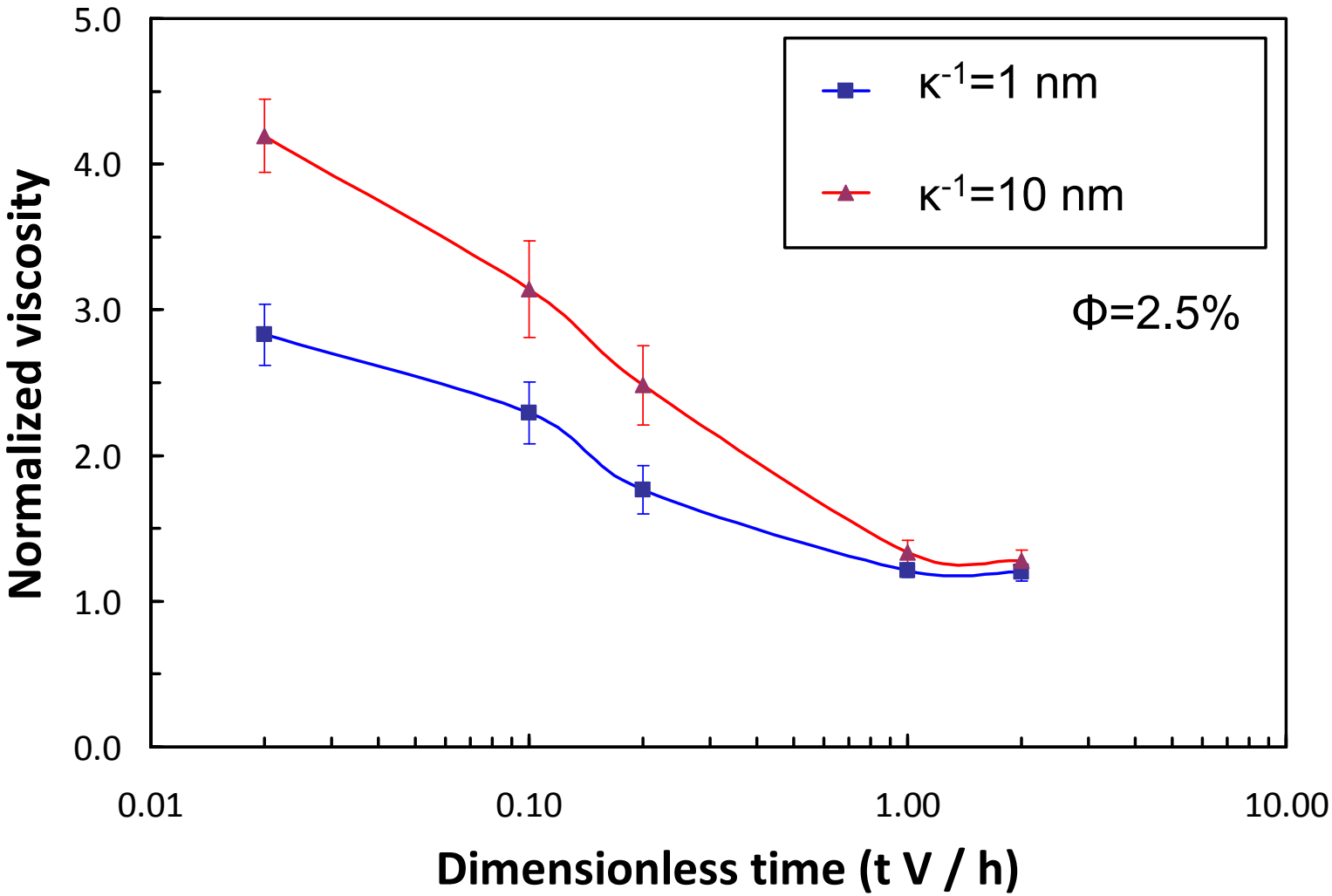

Conclusions

- A SDPD method has been established to study:
  - the rheology of NFC suspensions as a function of solid content, ionic strength, shear rate, temperature,…
  - the formation of self-assembled structures (e.g. NCC)
- Preliminary results predict the important impact of solid content and ionic strength
- Further validations are required…

Acknowledgments

- Funding organizations:

Forestcluster TEKES

- Managers of REP:
  - Dr. Jukka Ketoja
  - Dr. Erkki Hellèn

VTT

Thank you for your Attention !

Questions ?