Fast prediction of resin performance in curtain extrusion coating

Presented by:
Sylvie Vervoort, Rudi Steenbakkers, Bart Rijksen & Bernard Fehr
Dow Benelux B.V.

Objective

To have a user-friendly tool for quick simulations of the extrusion coating process with PE resins.

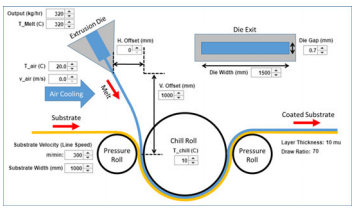

- Predict performance of new resin designs
- Find optimal run conditions at customers
- Dow can be your partner in development projects

Background: Rheological properties in EC models

Neck-in (NI) models		
Tetra Pak multivariate	f (DD)	LDPE
Chai, 2004 (BP)	NI $\propto G'\|_{G''=500\ Pa,\ 190\ °C}$	LDPE $MI_{(2.16\ kg,\ 190\ °C)}$ 4 – 8 dg/min
Silagy et al. (+ Exxon), late '90s	$\propto$ De, η_0, λ	LDPE, LLDPE
Mateus-Zavinska et al. (Dow)	Giesekus parameters determined from Rheotens extruder	LDPE, LLDPE, blends

→ Leverage Dow model + improve & optimize calculations

Process model

INPUT
- Material properties (rheology)
- Line geometry
- Process settings

OUTPUT
- Neck-in = die width – final web width
- Web thinning
- Temperature profile
- Molecular orientations / stresses

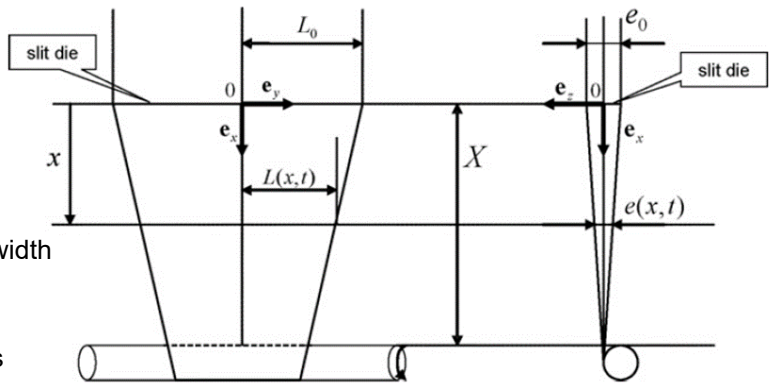

Process model

ASSUMPTIONS

- Thin film $e \ll L$ $e \ll X$
- Rectangular cross section $L = L(x,t)$ $e = e(x,t)$
- Mechanically and thermally incompressible $\boldsymbol{\nabla} \cdot \boldsymbol{v} = 0$ $\frac{\partial \rho}{\partial T} = 0$
- All surfaces stress free $\boldsymbol{\sigma} \cdot \boldsymbol{n} = \boldsymbol{0}$
- 1D heat transport $T = T(x,t)$
- Gravity negligible
- Inertia negligible
- *No swell*

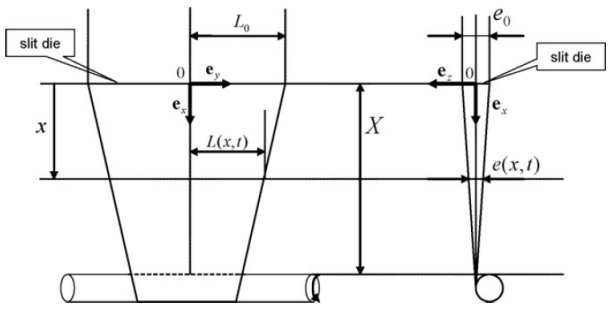

[Zavinska, *et al.*, J. Non-Newtonian Fluid Mech., 151, 21-29 (2008)]

Commonly measured data as resin input

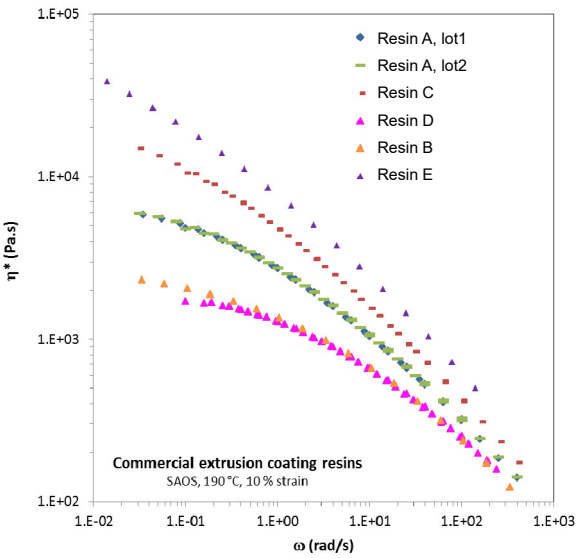

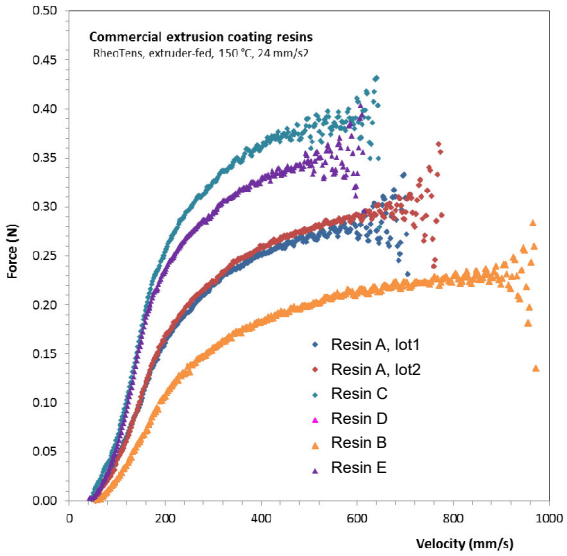

SAOS fitting, parameterization of Cross model

- Frequency sweep at 3 temperatures
- Master curve composed using time-Temperature superposition ⇒ E_a
- Cross model fitted

$$Cross: \frac{\eta}{\eta_0} = \frac{1}{1+(\lambda\dot{\gamma})^{(1-n)}}$$

η = viscosity
η_o = zero shear viscosity
$\dot{\gamma}$ = shear rate
λ = relaxation time
n = power law index

⇒ η_0 and λ

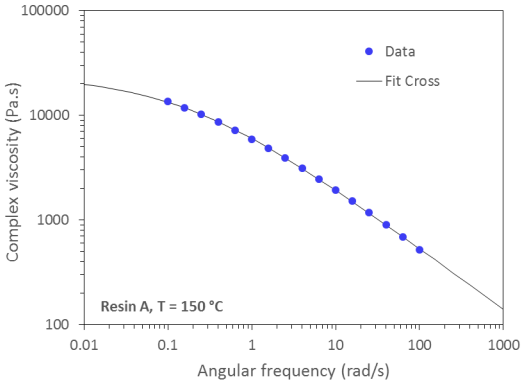

Rheotens fitting, parameterization of Giesekus model

- The modified Giesekus model has four parameters:
  1. Zero-shear viscosity η_0 → *from Cross fit*
  2. Relaxation time λ → *from Cross fit*
  3. Number of chain segments N_0 → *from Rheotens*
  4. Anisotropy parameter $\alpha \in [0,1]$ → *from Rheotens*
- In a broad velocity range, the Rheotens force-velocity curve is described well by

$$F(v) = F_\infty(1 - v_0/v)$$

- F(v) is fitted to the data and selected points are used to fit the fiber spinning model (including a modified Giesekus rheological model) assuming quasi-steady state, as validated by Zavinska *et al.* (2008)

⇒ N_0 and α

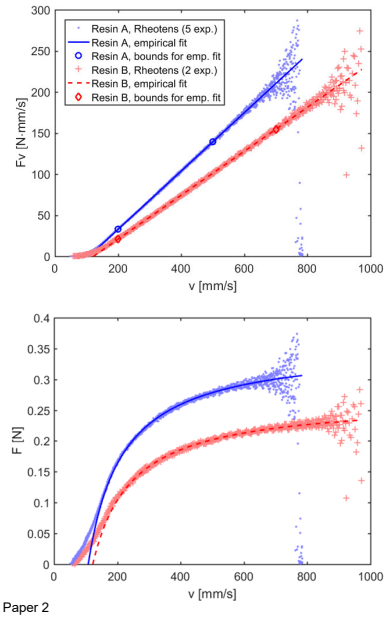

[Zavinska, *et al.*, Int. J. Mater. Form., 1, 807-810 (2008)]

Model validation

- Common extrusion coating resins
- Experiments on extrusion coating lines at our R&D

	Resin A	Resin B
	AGILITY™ EC 7000	LDPE PT 7007
	Tubular	Autoclave
ρ ASTM D792	0.918 g/cm^3	0.918 g/cm^3
I_2 ASTM D1238	3.9 dg/min	7.4 dg/min
I_{10}/I_2	12.5	9.9
Melt elasticity	4.4 cN	2.9 cN
M_w by Ls	208 kg/mol	448 g/mol
M_w/M_n	16	36

Parameterization of Giesekus model

	Resin A	Resin B
η_0 [Pa.s]	24766	9208
λ [s]	7.49	2.06
N_0	134	66
α	0.48	0.23
E_a [kJ/mol]	53.8	50.2

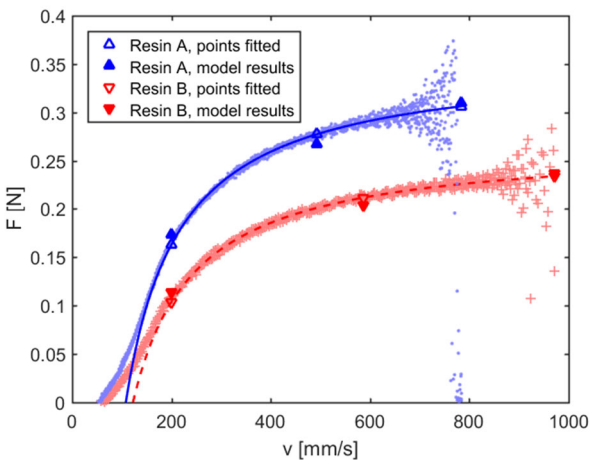

Process simulations – Effect of line speed

Resin A (T = 317 °C)

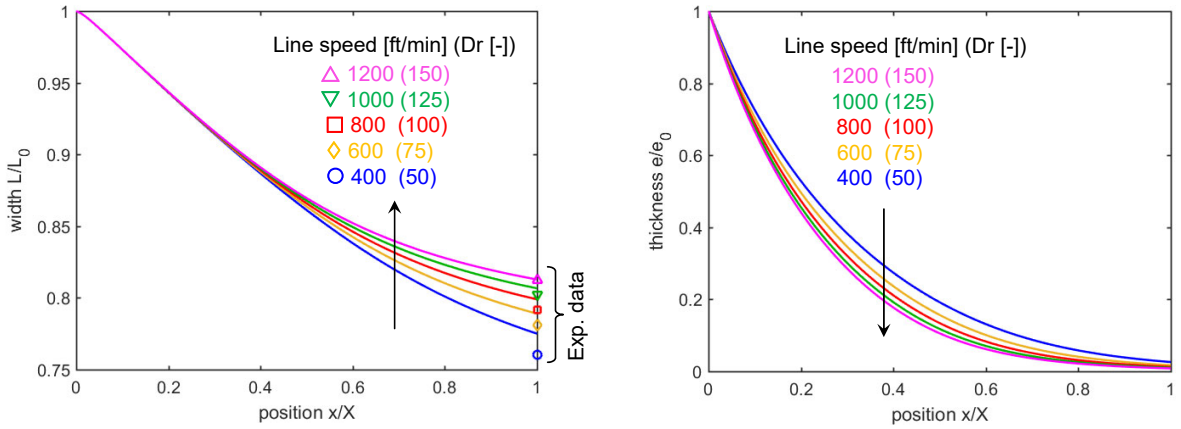

Process simulations – Polymer comparison

Solid lines: resin A, dashed lines: variation on resin B

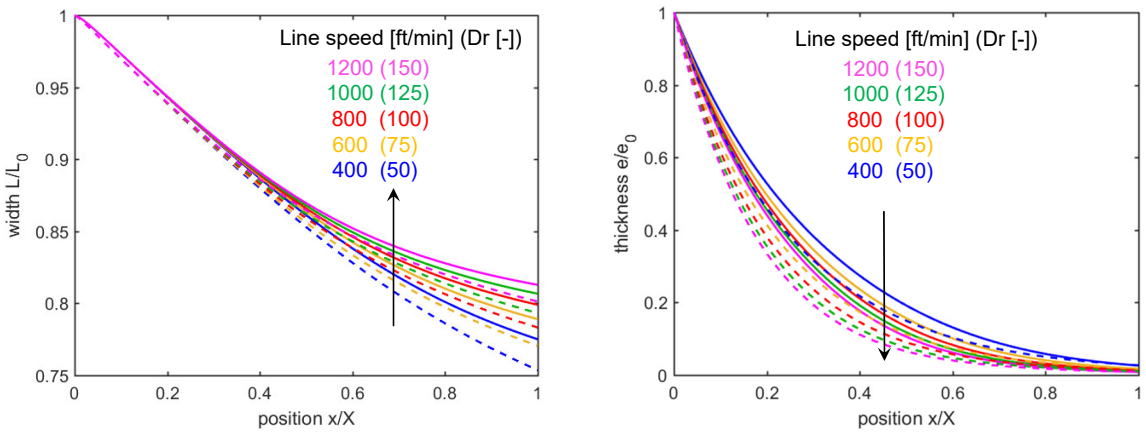

The tool – Input window

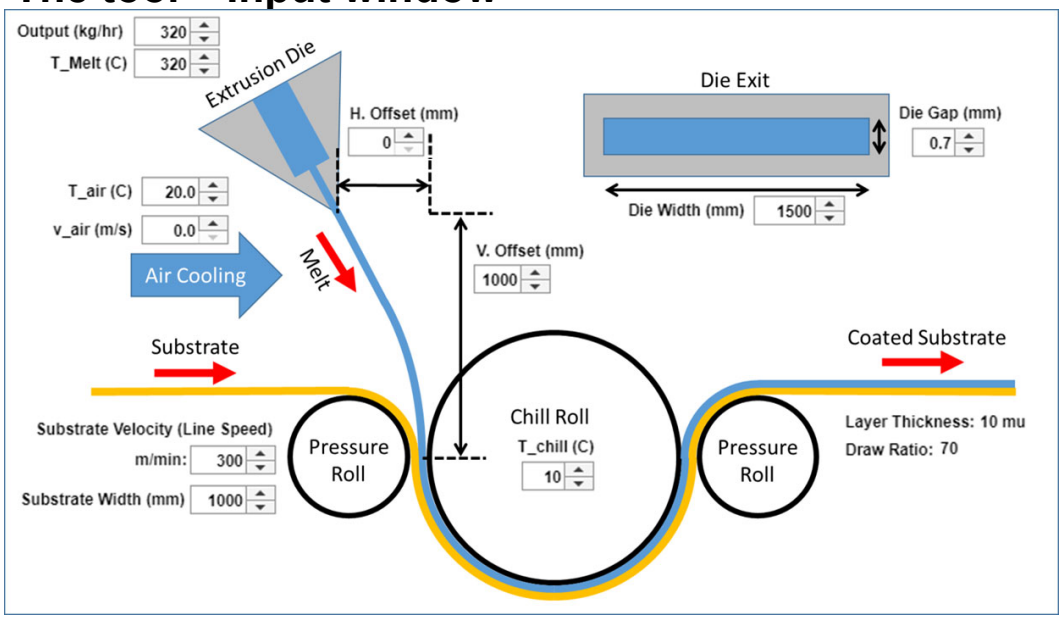

The tool – Output window

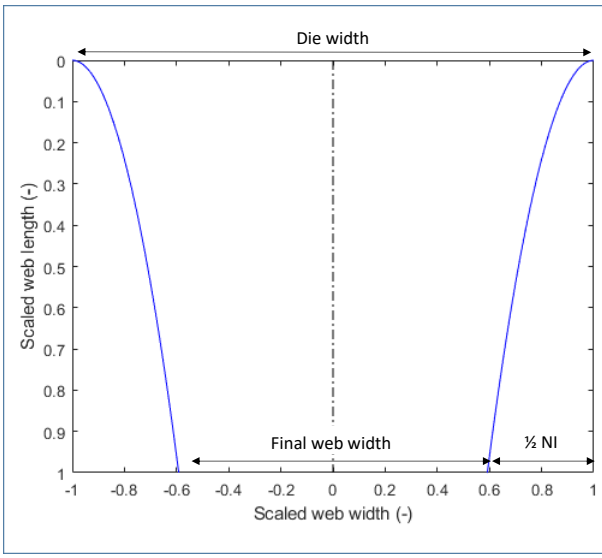

Temperature (°C)	320
Roll speed (m/min)	320
Extruder output (kg/hr)	300
Layer thickness (µm)	10
Draw ratio (-)	70
Neck-in (mm)	30

Calculation time < 1 s

Summary – The process

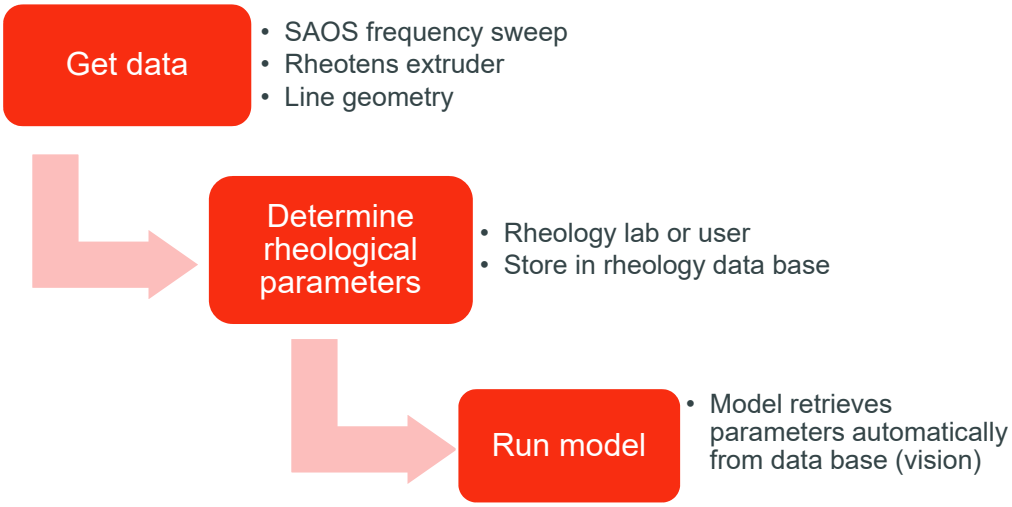

Conclusions

- Tool for quick simulation of coating curtain
- Effect of line geometry
- Effect of process conditions → optimize run conditions
- Effect of polymer rheology → resin performance
- Development partner for your packaging needs

Thank you
for your attention

Presented by:

Sylvie Vervoort
Dow Benelux B.V,
Terneuzen, The Netherlands
svervoort@dow.com

PLACE
POLYMERS | LAMINATIONS | ADHESIVES | COATINGS | EXTRUSIONS
www.tappiplace.org

DOW